How to analyze a clocked sequential ckt?

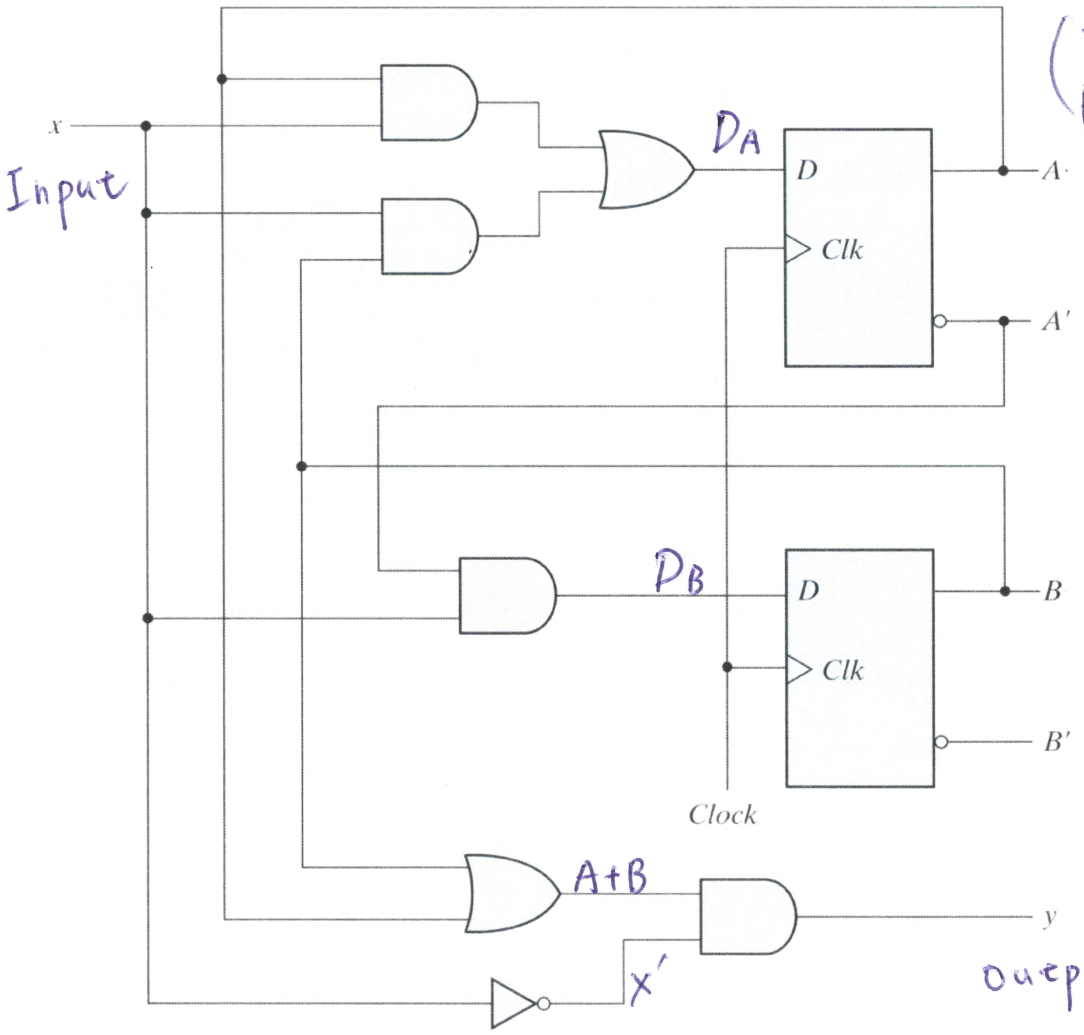

(Inputs → Outputs)
(Present State → Next State)

According to this diagram, we can obtain,

① Input equation.

$D_A = xA + xB$

$D_B = xA'$

② Output equation

$y = x' \cdot (A + B)$

③ State equation

$A(t+1) = D_A(t) = xA + xB$

$B(t+1) = D_B(t) = xA'$

State table

Present States		Input	Next States		Output
A(t)	B(t)	x	A(t+1)	B(t+1)	$y(t) = x' \cdot (A+B)$
0	0	0	0	0	0
0	0	1	0	1	0
0	1	0	0	0	1
0	1	1	1	1	0
1	0	0	0	0	1
1	0	1	1	0	0
1	1	0	0	0	1
1	1	1	1	0	0

Another form of the state table

Table 5.3
Second Form of the State Table

Present State		Next State				Output	
		$x = 0$		$x = 1$		$x = 0$	$x = 1$
A	B	A	B	A	B	y	y
0	0	0	0	0	1	0	0
0	1	0	0	1	1	1	0
1	0	0	0	1	0	1	0
1	1	0	0	1	0	1	0

State diagram

Table 5.2
State Table for the Circuit of Fig. 5.15

Present State		Input	Next State		Output
A	*B*	*x*	*A*	*B*	*y*
0	0	0	0	0	0
0	0	1	0	1	0
0	1	0	0	0	1
0	1	1	1	1	0
1	0	0	0	0	1
1	0	1	1	0	0
1	1	0	0	0	1
1	1	1	1	0	0

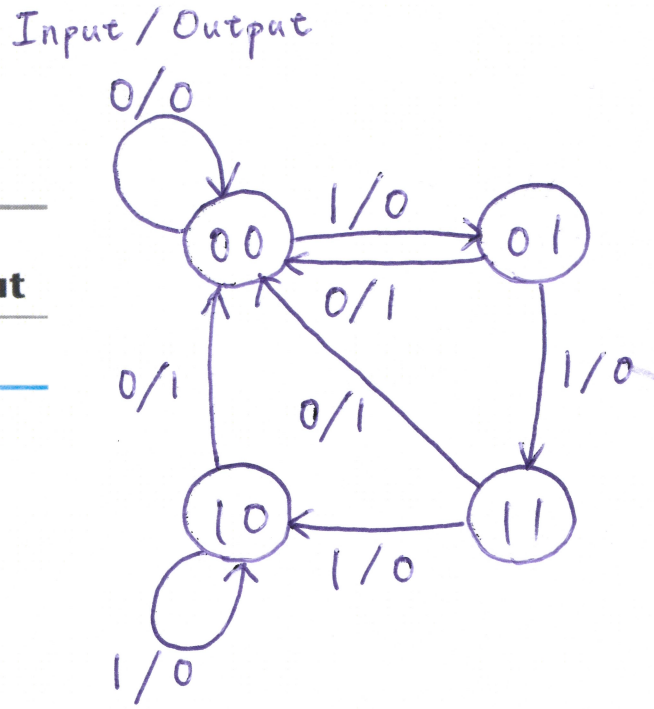

logic circuit/diagram

⇕

Input/Output Eq.

State Eq.

⇕

State table

⇕

State diagram

Analysis

Flow chart

Analysis with D flip-flops

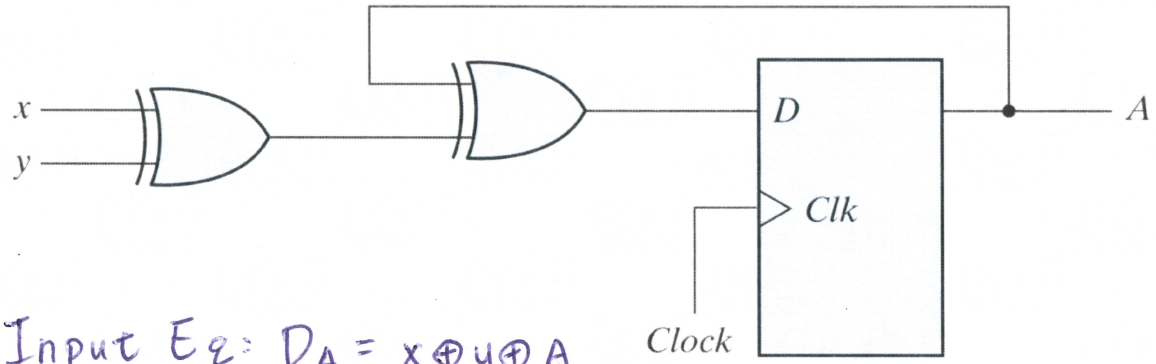

Input Eq: $D_A = x \oplus y \oplus A$

State Eq: $A(t+1) = x \oplus y \oplus A$

Present State	Inputs		Next State
A(t)	x	y	A(t+1)
0	0	0	0
0	0	1	1
0	1	0	1
0	1	1	0
1	0	0	1
1	0	1	0
1	1	0	0
1	1	1	1

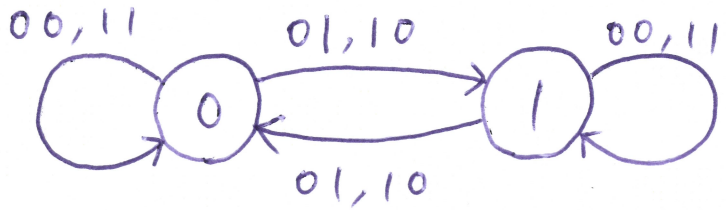

Analysis with JK flip-flops

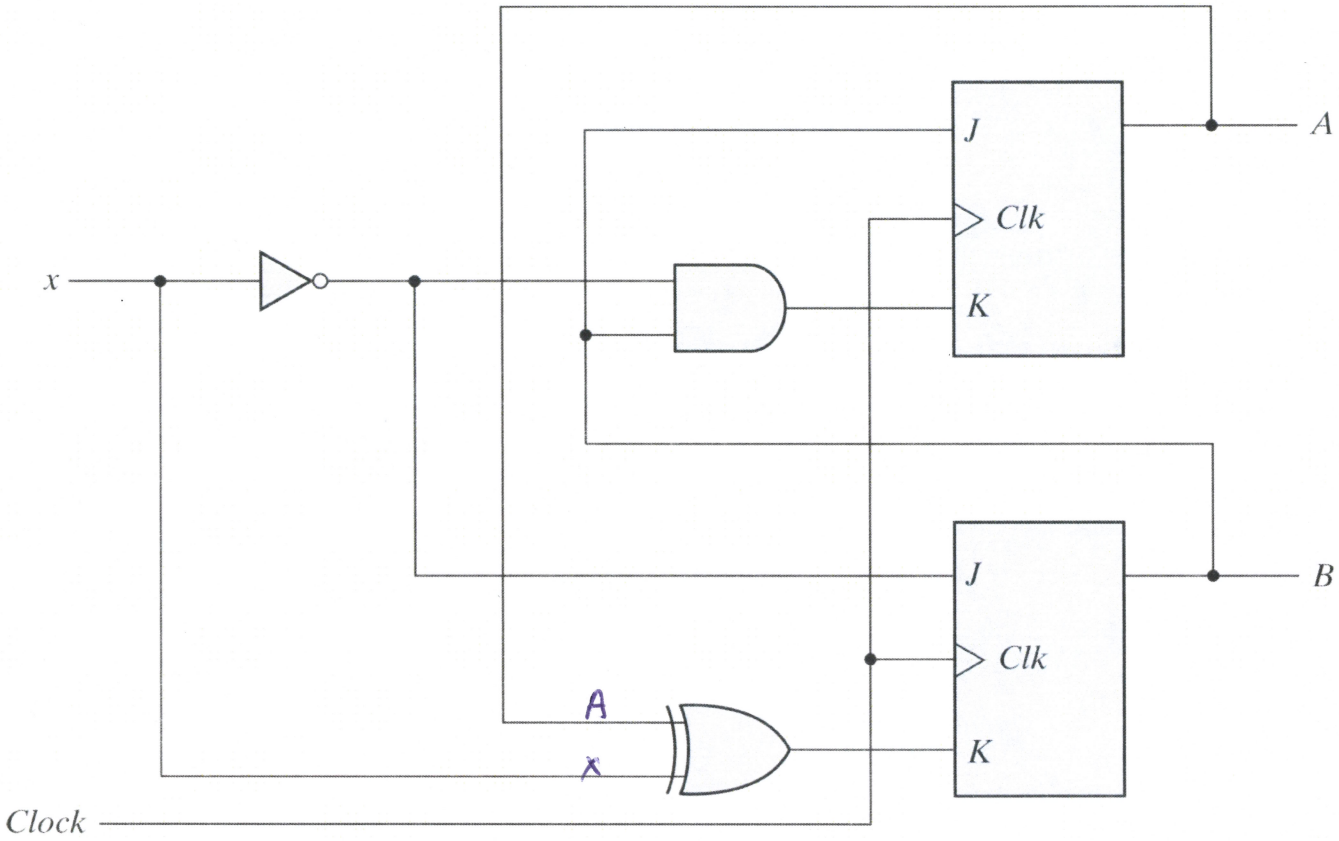

Input Eq.

$J_A = B,\ K_A = x'B$

$J_B = x',\ K_B = x \oplus A$

State Eq. $Q(t+1) = JQ' + K'Q$

$A(t+1) = J_A \cdot A' + K_A' \cdot A$

$B(t+1) = J_B \cdot B' + K_B' \cdot B$

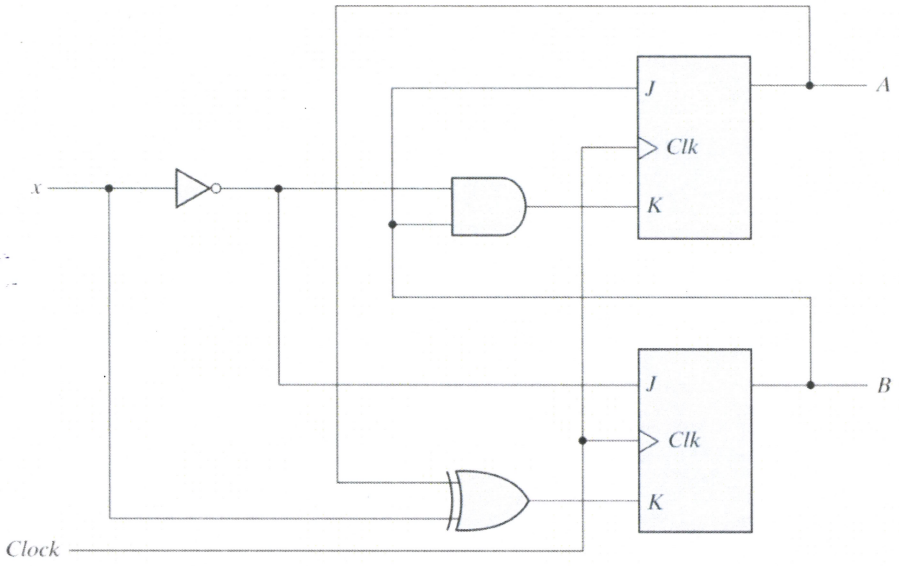

$J_A = B \quad K_A = x'B$

$J_B = x' \quad K_B = x \oplus A$

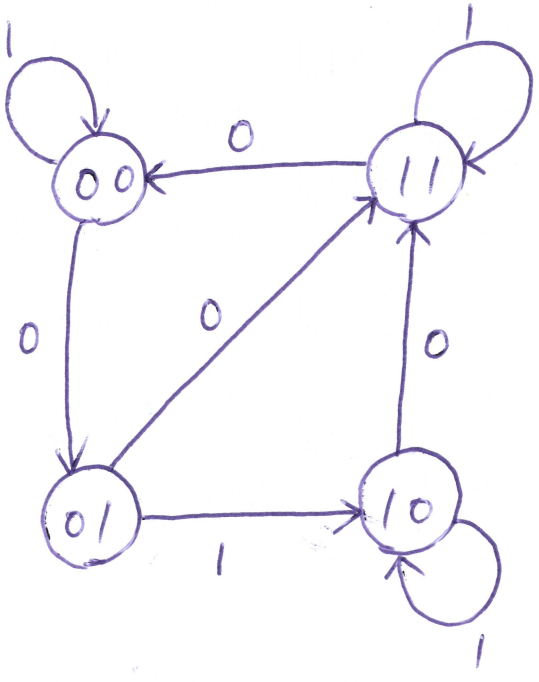

Present Input Next States

A	B	X	A(t+1)	B(t+1)	J_A	K_A	J_B	K_B
0	0	0	0	1	0	0	1	0
0	0	1	0	0	0	0	0	1
0	1	0	1	1	1	1	1	0
0	1	1	1	0	1	0	0	1
1	0	0	1	1	0	0	1	1
1	0	1	1	0	0	0	0	0
1	1	0	0	0	1	1	1	1
1	1	1	1	1	1	0	0	0

Analysis with T flip-flops

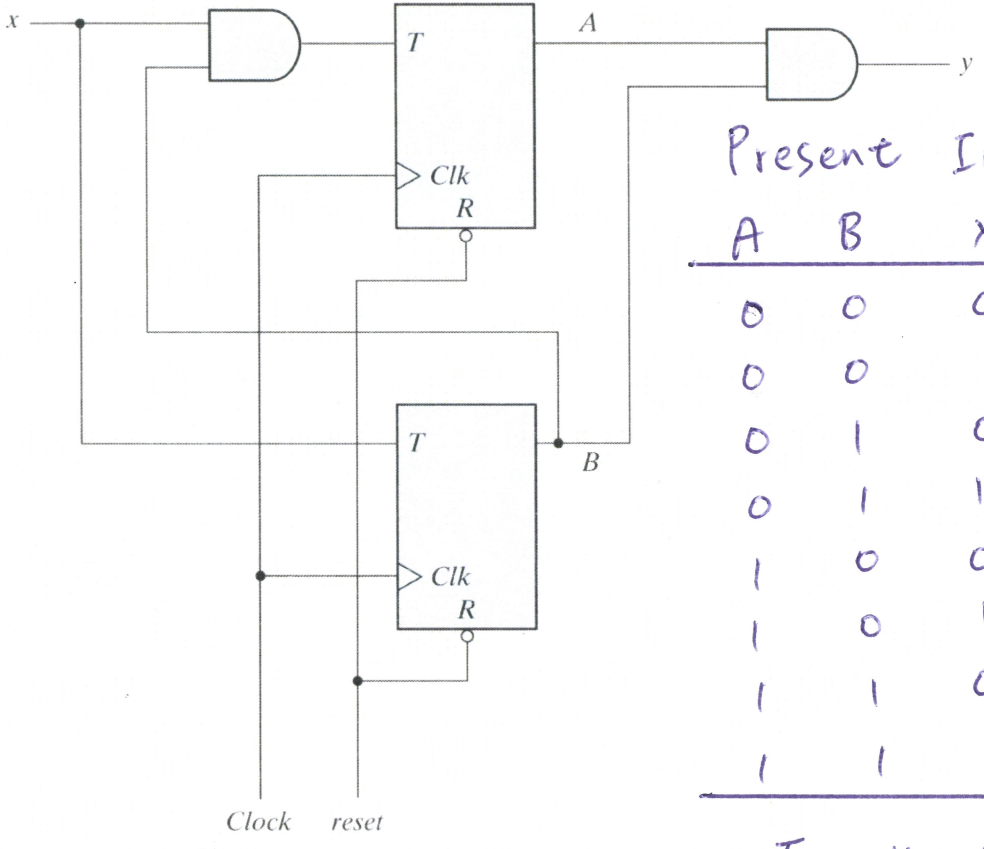

Present A	Present B	Input x	Next A(t+1)	Next B(t+1)	Output y	T_A	T_B
0	0	0	0	0	0	0	0
0	0	1	0	1	0	0	1
0	1	0	0	1	0	0	0
0	1	1	1	0	0	1	1
1	0	0	1	0	0	0	0
1	0	1	1	1	0	0	1
1	1	0	1	1	1	0	0
1	1	1	0	0	1	1	1

Input Eq. $T_A = xB$ Output Eq. $y = A \cdot B$

$T_B = x$

State Eq. $A(t+1) = T_A \cdot A' + T_A' \cdot A$

$(Q(t+1) = T \oplus Q)$ $B(t+1) = T_B \cdot B' + T_B' \cdot B$

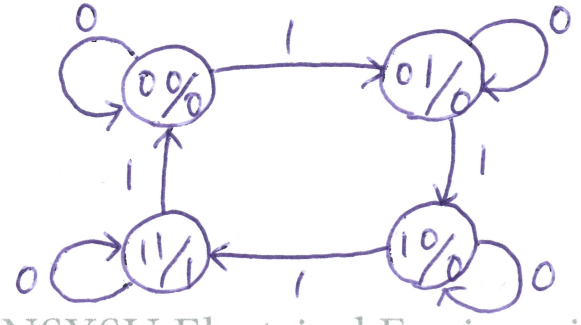

Mealy model / Moore model

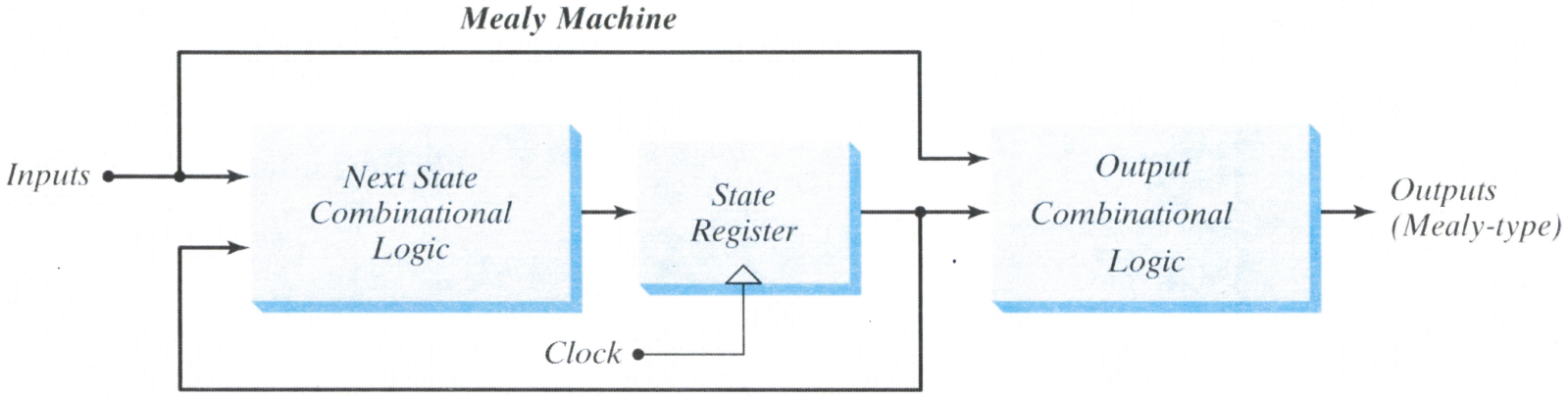

(a)

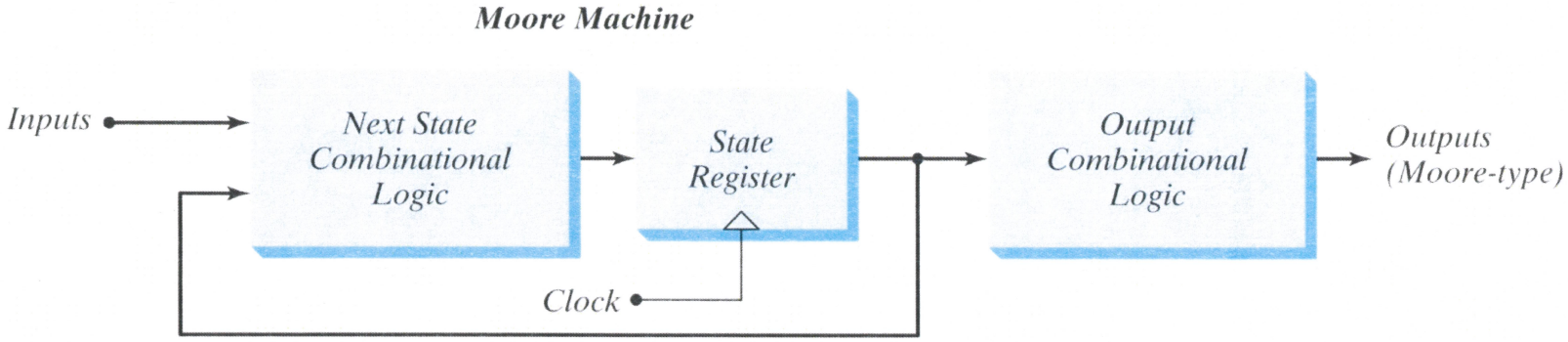

(b)